EUROfase INC.

TEL 905.695.2055 **toll free** 1.800.660.5391
FAX 905.695.2056 **toll free** 1.800.660.5390

33 West Beaver Creek Road Richmond Hill, Ontario Canada L4B 1L8

PHILLIMORE, 32" LINEAR CHANDELIER

PRODUCT DETAILS

No.	:	37351-014
Product Color	:	BRUSHED GOLD
Product Material	:	METAL
Shade / Accent Colour	:	CLEAR
Shade / Accent Material	:	GLASS
Length	:	44.5"
Width	:	4.25"
Height	:	8.25"
Overall Height	:	105.5"

LIGHT SOURCE DETAILS

Light Source Type	:	INTEGRATED LED
Input Voltage	:	120V
Bulb Voltage	:	120V
Socket Type	:	LED
Total Wattage	:	15W
Total Lumen	:	1200lm
Kelvin	:	3500K
Dimmable	:	Yes

Options Available

ITEM NO.	FINISH	SHADE
37351-014	BRUSHED GOLD	CLEAR

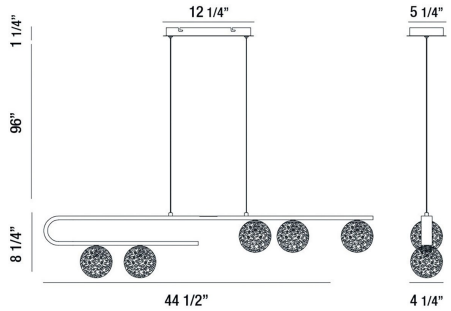

TECHNICAL DETAILS

Hanging Support Type	:	AIRCRAFT CABLE
Hanging Support Length	:	96"
Canopy / Backplate Length	:	12.25"
Canopy / Backplate Height	:	1.25"
Canopy / Backplate Width	:	5.25"
Approval	:	

PROJECT INFORMATION

Job Name: Date: Type:

Comments: