Spider® II Temporary Power Boxes

Features and Benefits

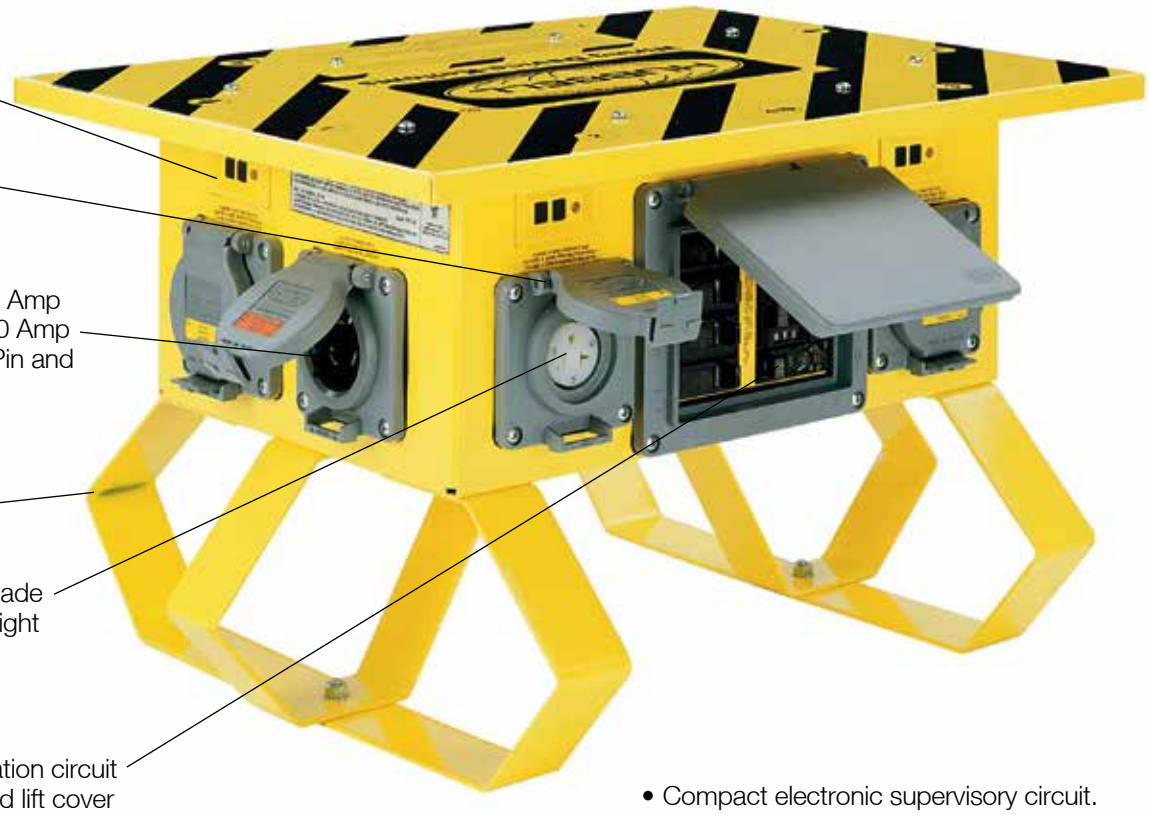

SBSB1A

- Compact electronic supervisory circuit.
- Detailed wiring diagram.
- TYPE 3R metallic enclosure and heavy duty, abuse resistant legs.

Hubbell's Spider® II temporary power distribution system sets the safety and performance standard for temporary power needs. Construction sites and outdoor events place more demands on electrical power than ever before. Hubbell's Spider box steps up to the challenge by offering advanced electrical and safety features. The Spider II box incorporates the most advanced ground fault module technology available in the industry today, ensuring safe and reliable distribution of electrical power for a wide variety of temporary power applications.

Breadth of Line and Innovation

Hubbell manufactures a variety of Spider II Boxes and temporary power products for both indoor and outdoor power and lighting applications. Hubbell's Spider products incorporate the most innovative wiring devices in the Hubbell Safety-Shroud® Twist-Lock® system. The shrouded Twist-Lock design extends the life of the plug by protecting the blades from abuse and, more importantly, the shroud protects the user from arcing. The Spider II temporary power system incorporates Watertight Safety-Shroud Twist-Lock receptacles to provide a UL Type 4X rating when the receptacles are used with Watertight Safety-Shroud Twist-Lock plugs. Standard Twist-Lock and Safety-Shroud Twist-Lock plugs may be used with these receptacles when water ingress during use is not a concern. To ensure an overall 3R rating when all receptacles are in use, Hubbell has also designed a weatherproof boot. This weatherproof boot for straight blade plugs maintains a 3R rating when it is used with the Spider II straight blade receptacles.

Environmental Protection

All Pin and Sleeve, Twist-Lock and straight blade receptacles on each Spider box are protected when not in use by a gasketed, spring loaded flip lid. Hubbell has taken multiple steps to ensure that the Spider II boxes can withstand today's harsh environmental requirements and as a result, the Spider II boxes have earned a 3R enclosure rating for outdoor rainproof applications. In addition to the added safety and water resistant features, Hubbell makes the boxes user friendly by offering a full line of replacement parts for field repairability.

Certifications

Hubbell's Spider II Boxes meet NEC® requirements for personal protection against electrical shock on job sites and are listed to the latest UL1640 standard for Portable Power Distribution Equipment.

NEC® is a registered trademark of the National Fire Protection Association (NFPA).

Spider® II Temporary Power Boxes

Ordering Information

50A Spider® II

60A Spider® II

60A Class "L" Spider® II

Spider® II Boxes

Rating	Type	Qty	Receptacle Ratings	Receptacle Components	Protection: Overload	Protection: GFI	Catalog Number
30A, 120/240V AC (Maximum)	Straight Blade	7	20A, 125V	HBL53R61	Yes	Yes	**SDSB1A**
	Twist-Lock® (inlet)	1	30A, 120/240V	HBL2715SWR	No	No	
	Twist-Lock® (outlet)	1	30A, 120/240V	HBL2710	No	No	
50A, 120/240V AC (Maximum)	Straight Blade	7	20A, 125V	HBL53R61	Yes	Yes	**SBSB1A**
	Twist-Lock® (inlet)	1	50A, 125/250V	HBL6375S	No	No	
	Twist-Lock® (outlet)	1	50A, 125/250V	CS6369	No	No	
50A, 120/240V AC (Maximum)	Straight Blade	6	20A, 125V	HBL53R61	Yes	Yes	**SBSB2**
	Twist-Lock®	1	30A, 250V	HBL2620SW	Yes	Yes	
	Twist-Lock® (inlet)	1	50A, 125/250V	HBL6375S	No	No	
	Twist-Lock® (outlet)	1	50A, 125/250V	CS6369	No	No	
50A, 120/240V AC (Maximum)	Twist-Lock®	7	20A, 125V	HBL2310SW	Yes	Yes	**SBTL1A**
	Twist-Lock® (inlet)	1	50A, 125/250V	HBL6375S	No	No	
	Twist-Lock® (outlet)	1	50A, 125/250V	CS6369	No	No	
50A, 120/240V AC (Maximum)	Twist-Lock®	6	20A, 125V	HBL2310SW	Yes	Yes	**SBTL2**
	Twist-Lock®	1	30A, 250V	HBL2620SW	Yes	Yes	
	Twist-Lock® (inlet)	1	50A, 125/250V	HBL6375S	No	No	
	Twist-Lock® (outlet)	1	50A, 125/250V	CS6369	No	No	
60A, 3Ø 120/208V AC (Maximum)	Straight Blade	6	20A, 125V	HBL53R61	Yes	Yes	**SCSB0***
	Pin and Sleeve (inlet)	1	60A, 3ØY 120/208V	HBL560B9R	No	No	
	Pin and Sleeve (outlet)	1	60A, 3ØY 120/208V	HBL560R9W	No	No	
60A, 3Ø 120/208V AC (Maximum)	Twist-Lock®	6	20A, 125V	HBL2310SW	Yes	Yes	**SCTL0***
	Pin and Sleeve (inlet)	1	60A, 3ØY 120/208V	HBL560B9R	No	No	
	Pin and Sleeve (outlet)	1	60A, 3ØY 120/208V	HBL560R9W	No	No	

Class "L" Spider® II Boxes

Rating	Type	Qty	Receptacle Ratings	Receptacle Components	Protection: Overload	Protection: GFI	Catalog Number
60A, 3Ø 120/208V AC (Maximum)	Straight Blade	6	20A, 125V	HBL53R61	Yes	Yes**	**SCSB0M2**
	Class "L" (inlet)	1	60A, 3ØY, 120/208V	—	No	No	
	Class "L" (outlet)	1	60A, 3ØY, 120/208V	—	No	No	
60A, 3Ø 120/208V AC (Maximum)	Twist-Lock®	6	20A, 125V	HBL2310SW	Yes	Yes**	**SCTL0M2**
	Class "L" (inlet)	1	60A, 3ØY, 120/208V	—	No	No	
	Class "L" (outlet)	1	60A, 3ØY, 120/208V	—	No	No	

*Note: *60A units are UL and cUL only.*
***GFCI protection on 4 devices only.*

Dimensions

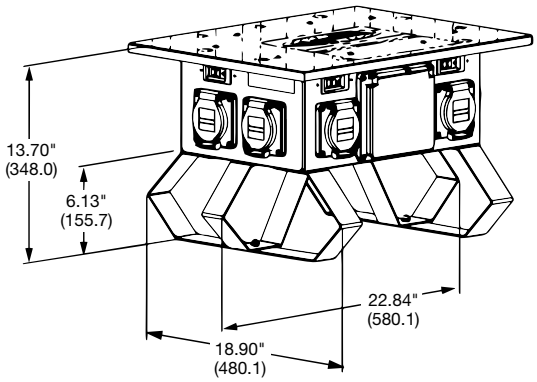

Dimensions in Inches (mm)

Specifications

Spider® II

Listing/Certification	UL 1640 cUL and CSA, UL 943.
Environment	Indoor and outdoor wet and dry locations.
Enclosure Type	3R, rainproof, suitable for use in damp locations.
Code Compliance	NEC®, ANSI/NFPA 70.

NEC® is a registered trademark of the National Fire Protection Association (NFPA).