Date		Project	
Type		Part Number	

ARCHITECTURAL LUMINAIRES BY RENO LIGHTING

AURA Series

Square Regressed Gimbals

The RENO Lighting's LED Square Gimbal High Output downlight combines a sleek design with a small aperture without any compromise to the light output. With up to 1600 lumens and a CRI of 90, this small downlight provides an outstanding performance that will suit both residential and commercial applications.

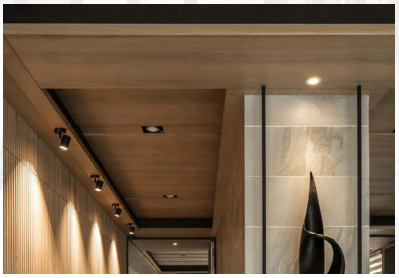

Product Features

- IC-Rated and Air-Tight ready and may be in direct contact with insulation
- May be installed in dry wall or suspended ceilings
- Flicker-free 120V forward phase TRIAC Dimming (down to 5%)
- JA8 Compliant
- Operating temperature: -4°F to 113°F (-20°C to 45°C)
- Rated Lifetime L70 >50,000 hrs
- 5 year warranty

Key Specifications

Voltage	120V
Wattage	12W and 2x12W (24W)
Efficacy	66.67 lm/W
CCT	2700K, 3000K, 3500K, 4000K, 5000K
CRI	90
Lumens	Up to 1600 lm
Beam Angle	40°
Dimming	TRIAC 120V
Finish	White or Black
Mounting	Regressed
Applications	Residential, Commercial, Hotel

905-604-4666 | info@renolighting.com | www.renolighting.com

REV. 10/30/25

Specifications

Order#	Model	Type	Wattage	Voltage	Lumens	CCT
R36125	RENO-LED-35-S12W-5CCT-WH-SQ	single	12W	120V	900 lm	27/30/35/40/5000K
R36126	RENO-LED-35-S12W-5CCT-BK-SQ	single	12W	120V	900 lm	27/30/35/40/5000K
R36127	RENO-LED-35-S24W-5CCT-WH-SQ	double	2x12W	120V	1600 lm	27/30/35/40/5000K
R36128	RENO-LED-35-S24W-5CCT-BK-SQ	double	2x12W	120V	1600 lm	27/30/35/40/5000K

Dimensions

12W

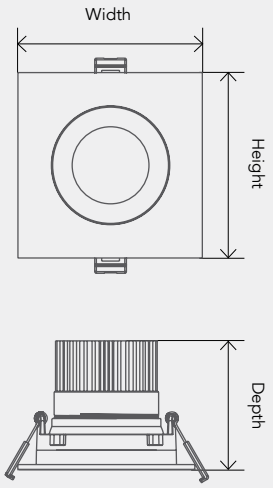

Width:	4.4" (110 mm)
Height:	4.4" (110 mm)
Depth:	3.3" (82 mm)

24W

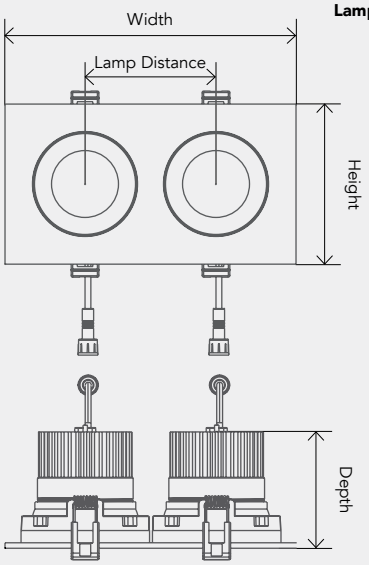

Width:	7.9" (200 mm)
Lamp Distance:	3.5" (90 mm)
Height:	4.4" (110 mm)
Depth:	3.3" (82 mm)

Accessories

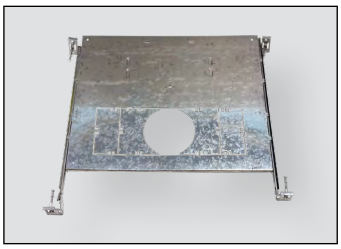

R39107

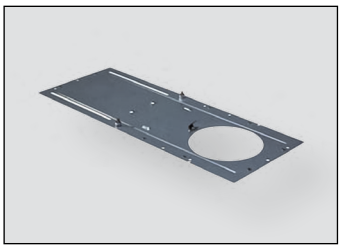

R39108

Order#	Model	Description
R39107	RENO-MC-123	Multiple Head Universal Pre-Mounting New Construction Plate for 3.5" LED Combo Series
R39108	RENO-MP4	Mounting Plate without clip