Date		Project	
Type		Part Number	

ARCHITECTURAL LUMINAIRES BY RENO LIGHTING

AURA Series

Regressed Gimbals

The RENO Lighting's LED Round Gimbal High Output downlight combines a sleek design with a small aperture without any compromise to the light output. With up to 900 lumens and a CRI of 90, this small downlight provides an outstanding performance that will suit both residential and commercial applications.

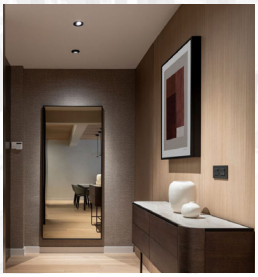

Product Features

- JA8 Compliant
- Energystar Certified
- IC-Rated and Air-Tight ready and may be in direct contact with insulation
- May be installed in dry wall or suspended ceilings
- Flicker-free 120V forward phase TRIAC Dimming (down to 5%)
- Operating temperature: -4°F to 113°F (-20°C to 45°C)
- Rated Lifetime L70 >50,000 hrs
- 5 year warranty

Key Specifications

Voltage	120V
Wattage	12W
Efficacy	75 lm/W
CCT	2700K, 3000K, 3500K, 4000K, 5000K
CRI	90
Lumens	900 lm
Beam Angle	38°
Dimming	TRIAC 120V
Finish	White or Black
Mounting	Regressed
Applications	Residential, Commercial, Hotel

905-604-4666 | info@renolighting.com | www.renolighting.com

REV. 12/10/25

Specifications

Order#	Model	Size	Wattage	Voltage	Lumens	CCT
R36121	RENO-LED-AURA-35-S12W-5CCT-WH	3.5″	12W	120VV	900 lm	27/30/35/40/5000K
R36122	RENO-LED-AURA-35-S12W-5CCT-BK	3.5″	12W	120VV	900 lm	27/30/35/40/5000K
R36123	RENO-LED-AURA-4-S12W-5CCT-WH	4.0″	12W	120VV	900 lm	27/30/35/40/5000K
R36124	RENO-LED-AURA-4-S12W-5CCT-BK	4.0″	12W	120VV	900 lm	27/30/35/40/5000K

Accessories

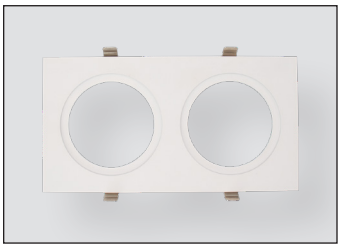

R39115

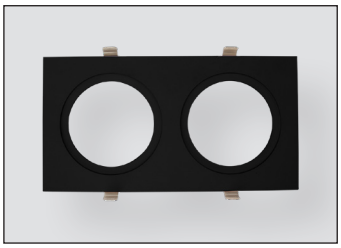

R39116

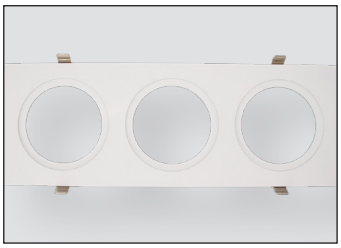

R39117

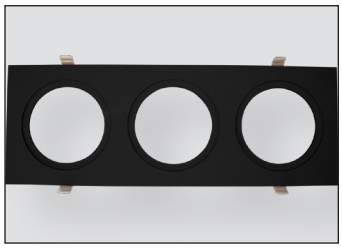

R39118

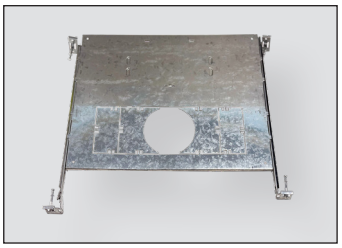

R39107

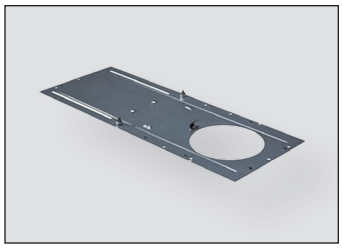

R39108

Order#	Model	Description
R39115	RENO-MLP2-35-WH	Multiple Lighting System Plates for two White 3.5″ Round Regressed Gimbals (R36121)
R39116	RENO-MLP2-35-BK	Multiple Lighting System Plates for two Black 3.5″ Round Regressed Gimbals (R36122)
R39117	RENO-MLP3-35-WH	Multiple Lighting System Plates for three White 3.5″ Round Regressed Gimbals (R36121)
R39118	RENO-MLP3-35-BK	Multiple Lighting System Plates for three Black 3.5″ Round Regressed Gimbals (R36122)
R39107	RENO-MC-123	Multiple Head Universal Pre-Mounting New Construction Plate for 3.5″ LED Combo Series
R39108	RENO-MP4	Mounting Plate without clip

Dimensions

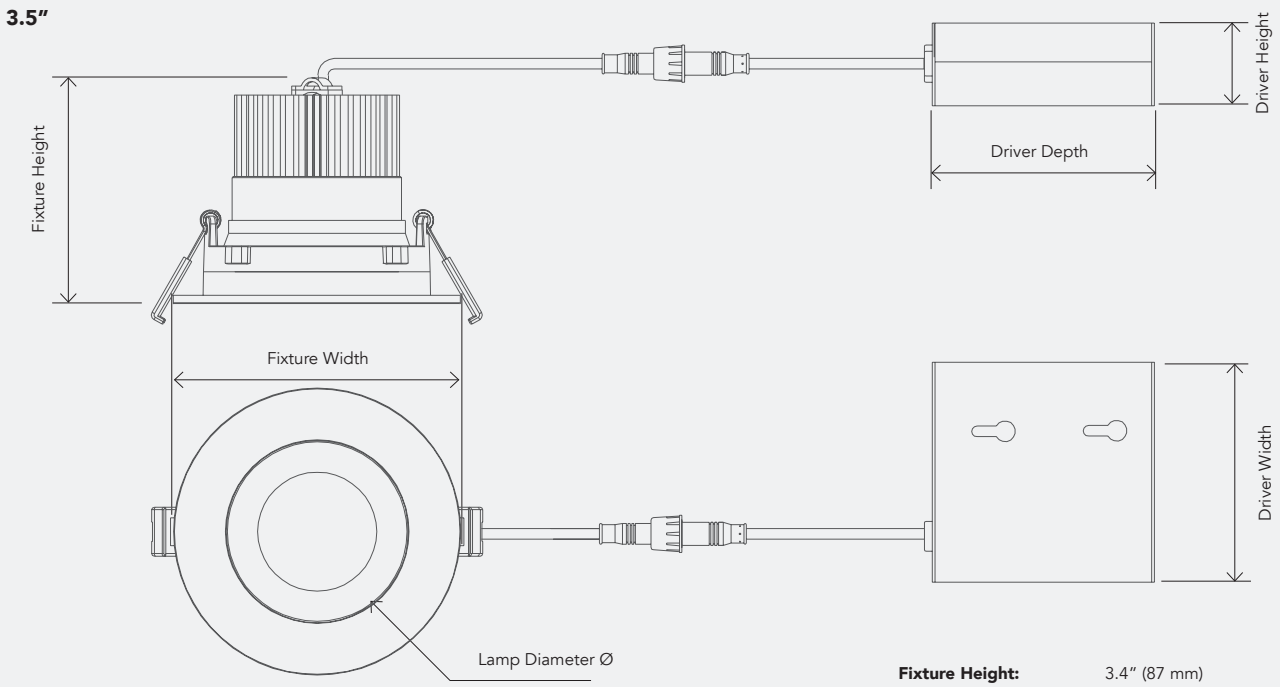

Fixture Height:	3.4” (87 mm)
Fixture Width:	4.4” (111 mm)
Lamp Diameter Ø:	2.7” (68.6 mm)
Driver Height:	1.1” (34 mm)
Driver Width:	3.4” (85 mm)
Driver Depth:	3.4” (86 mm)
Wiring:	12.0” (300 mm)

Dimensions

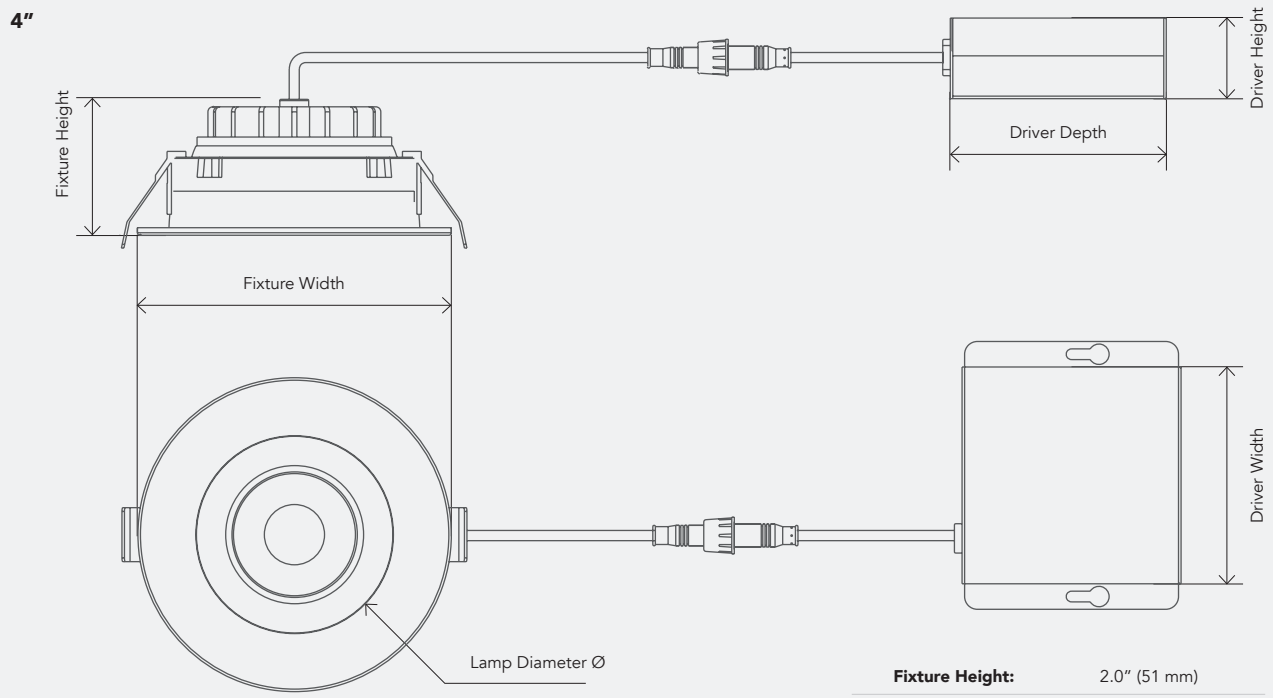

Fixture Height:	2.0" (51 mm)
Fixture Width:	4.9" (125 mm)
Lamp Diameter Ø:	3" (76.2 mm)
Driver Height:	1.3" (85 mm)
Driver Width:	3.4" (85.7 mm)
Driver Depth:	3.4" (86 mm)
Wiring:	12.0" (300 mm)